AMEREN IL BTM METER CABINET
LAYOUT AND CONNECTION DIAGRAM
NOT TO SCALE (Ver 2020-04-02)

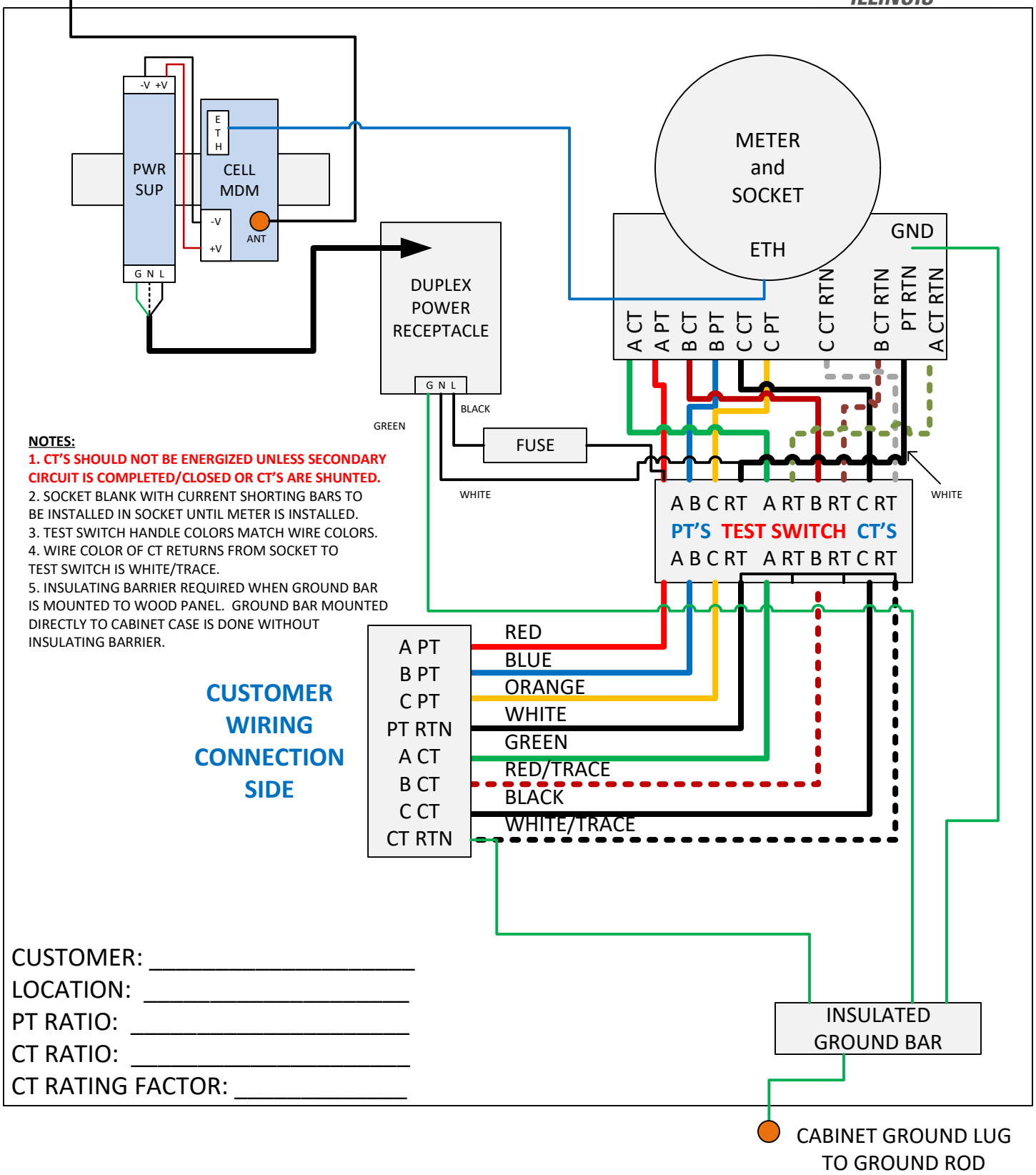

NOTES:

1. CT'S SHOULD NOT BE ENERGIZED UNLESS SECONDARY CIRCUIT IS COMPLETED/CLOSED OR CT'S ARE SHUNTED.

2. SOCKET BLANK WITH CURRENT SHORTING BARS TO BE INSTALLED IN SOCKET UNTIL METER IS INSTALLED.

3. TEST SWITCH HANDLE COLORS MATCH WIRE COLORS.

4. WIRE COLOR OF CT RETURNS FROM SOCKET TO TEST SWITCH IS WHITE/TRACE.

5. INSULATING BARRIER REQUIRED WHEN GROUND BAR IS MOUNTED TO WOOD PANEL. GROUND BAR MOUNTED DIRECTLY TO CABINET CASE IS DONE WITHOUT INSULATING BARRIER.

CUSTOMER: _____

LOCATION: _____

PT RATIO: _____

CT RATIO: _____

CT RATING FACTOR: _____